TOWN OF GORHAM
PLANNING OFFICE
75 South Street, Suite 1
Gorham, Maine 04038
Phone: (207) 222-1620 Fax: (207) 839-7711

ADMINISTRATIVE SITE PLAN REVIEW

		WITH NEW CONSTRUCTION	WITH NO CONSTRUCTION	AMENDMENT	Amount Paid
FEES FOR PLAN REVIEW	**RESIDENTIAL SITE PLAN**	☐ $1000<2000 sf gfa + $25/ea. Add'l 1000 sf or fraction thereof + $50 Public Notice	☐ $600 + $50 Legal Ad/ Public Notice	☐ $1000 flat fee + $50 Public Notice	**$**
	NON-RESIDENTIAL SITE PLAN	☐ $500<2000 sf GFA + $20/ea add'l 1000 sf or fraction thereof up to min of $500 + $50 Public Notice	☐ $500<2000 sf GFA + $20/ea add'l 1000 sf or fraction thereof up to min of $500 + $50 Public Notice	☐ $200<2000 sf GFA + $20/ea. Add'l 1000 sf or fraction thereof up to a max of $500 + $50 Public Notice.	**Date Paid**

PROPERTY DESCRIPTION	**Parcel ID**	**Map/Lot #(s)**		**Zoning District**		**Total Land Area**
	Physical Address					

PROPERTY OWNER'S INFORMATION	**Name**		**Mailing Address**	
	Phone			
	Fax			
	Email			
APPLICANT'S INFORMATION ***(if different from owner)***	**Name**		**Name of Business**	
	Phone		**Mailing Address**	
	Fax			
	Email			
APPLICANT'S AGENT INFORMATION	**Name**		**Name of Business**	
	Phone		**Mailing Address**	
	Fax			
	Email			

PROJECT DESCRIPTION	**Existing Use:**
	Proposed Use: Please describe in detail all changes to the current use of the property, any renovations to be made to existing buildings and any proposed new structure. (Attach a separate sheet if more space is needed.)

THE ORIGINAL SIGNED COPY OF THIS FORM MUST BE ACCOMPANIED BY THE REQUIRED APPLICATION FEE, REQUIRED NUMBER OF APPLICATION FORMS, PLANS, AND OTHER NECESSARY SUBMISSIONS, AS OUTLINED ON THE ATTACHED ADMINISTRATIVE REVIEW SUBMISSIONS CHECKLIST.

APPLICATION FOR ADMINISTRATIVE REVIEW

Check All That Apply	PLEASE ANSWER THE FOLLOWING: (Check Yes, No or comment Does Not Apply	Explain or comment as needed for clarification

YES	NO	THE PROPOSED PROJECT INVOLVES THE FOLLOWING:	
☐	☐	Construction or addition of fewer than fifteen thousand (15,000) square feet of gross floor area in a nonresidential building or structure in an Industrial District.	
☐	☐	Addition of less than twenty percent (20%) of the existing gross floor area but not more than ten thousand (10,000) square feet of floor area in a nonresidential building or structure in any district other than an Industrial District within any three-year period.	
☐	☐	Construction of less than ten thousand (10,000) square feet of floor area in a nonresidential building or structure in a Rural District or Roadside Commercial District within any three-year period	
☐	☐	Construction of less than two thousand (2,000) square feet of floor area in a nonresidential building or structure in the Urban Residential, Suburban Residential, Village Center, Urban Commercial, Suburban Roadside Office, office Residential or Narragansett Development districts	
☐	☐	Construction of a residential structure with four (4) or less units.	
☐	☐	Modification or expansion of an existing residential structure in which the number of dwelling units after construction will be four (4) or less.	
☐	☐	Conversion of an existing residential building, in whole or in part, to a nonresidential use with the exception of bed and breakfast establishments with public dining as an accessory use and inns.	
☐	☐	Earth moving, removal, grading or filling activities which involves ten thousand (10,000) cubic yards of material or less and which are not subject to the gravel pit provisions of Chapter II, Section I ©	
☐	☐	Construction or expansion of an impervious surface such as, but not limited to: pavement, concrete, brick, stone and gravel with fewer than ten thousand (10,000) square feet of area within any three-year period.	
☐	☐	Is this application an amendment to an approved Site Plan? If so, please provide the name of the approved plan and date of approval.	
☐	☐	**Attached are copies** of most recent Deed, documents showing 'Right, Title and/or Interest' in the property, or Contract to Purchase or Option to Lease the property.	
☐	☐	Does the owner hold any interest in abutting or contiguous property? If yes, please explain:	
☐	☐	Identify any and all easements on the property. **Attach copies of all easement deeds.**	

Check All That Apply	PLEASE ANSWER THE FOLLOWING: (Check Yes, No or comment Does Not Apply).	Explain or comment as needed for clarification

YES	NO	DIMENSIONS: *Please attach calculations and/or plans, as applicable, that show construction details for the following, Parking Area(s), Constructions Notes, Final Grades, Drainage, Etc.*	
☐	☐	Floor area of existing structure(s) is:	sq. ft.
☐	☐	Floor Area of proposed new structure(s) is.	sq. ft.
☐	☐	Maximum building height is (are):	feet
☐	☐	Number of stories is (are):	
☐	☐	Proposed Increase in building height or number of stories is (are):	or feet
☐	☐	Total volume of building space is:	cubic feet
☐	☐	Existing lot coverage: The percent of the lot covered by buildings is:	**%**
☐	☐	Proposed lot coverage: The percentage of lot area covered by new building(s) is:	**%**
☐	☐	Percentage of post development lot area covered by buildings is:	**%**

YES	NO	PARKING: (See attached Parking Standards)	
☐	☐	Total number of parking spaces required under the Zoning Ordinance	
☐	☐	Number of existing parking spaces:	
☐	☐	Estimated number of parking spaces required by proposed use is:	
☐	☐	Existing paved area is:	sq ft.
☐	☐	Proposed new paved area is:	sq ft.
☐	☐	Number of proposed new parking spaces	
☐	☐	Size of spaces: (9' x 18')	ft X ft
☐	☐	Width of maneuvering aisles	ft

YES	NO	UTILITIES:	
☐	☐	Public Sewer: Attach a letter from the Portland Water District (PWD) that verifies that public sewer can be connected to, and that the existing system has available capacity.	The estimated gallons per day is gpd**.**
☐	☐	Septic System: Subsurface waste disposal. **Attach a copy of the HHE 200 Report.**	
☐	☐	Public Water: Attach a letter from the Portland Water District (PWD) that verifies the site can be served for the foreseeable future and that the proposed water plan meets or exceeds design requirements of the PWD.	
☐	☐	Potable water will be provided by an on-site well.	
☐	☐	Fire Protection: Attach a letter from the Town of Gorham Fire Chief that verifies all design requirements for fire service and/or fire protection are satisfactory.	
Check All		**THE FOLLOWING QUESTIONS MAY APPLY.**	**Explain or comment as needed for**

That Apply	(Answer Yes/No or comment Does Not Apply).	clarification

YES	NO	UTILITIES (continued)	
		Utilities will be: ☐ underground ☐ overhead.	
		Power will be: ☐ Single Phase ☐ 2 Phase ☐ 3 Phase	
		Who is the Natural Gas provider?	
		Who is the private hauler for Trash Pick-up?	
☐	☐	Will the proposed use produce and/or involve the use of hazardous waste materials? If so, list all hazardous materials to be used and/or fabricated on site. Provide the name of the disposal company and a**ttach copies of agreements**.	

YES	NO	SIGNAGE	
☐	☐	Are there existing signs on-site? If so, how many are there and what is the total sign area in square feet?	existing signs totaling sq. ft.
☐	☐	Is there proposed new signage? If so, please fill out the Sign Application Packet and include with this packet.	

YES	NO	FLOODPLAIN AND SHORELAND ZONING	
☐	☐	Is any part of the property within the Shoreland Overlay District or a flood hazard area that is subject to periodic flooding? If yes, explain.	
☐	☐	Are the 100 yr. Floodplain Zones and the Shoreland Zoning boundaries shown on the site plan?	

Yes	NO	POST CONSTRUCTION STORMWATER MANAGEMENT	
☐	☐	Will the construction activity disturb one acre or more?	
☐	☐	Is the parcel located within the Town of Gorham MS4 area?	

YES	NO	AESTHETICS AND ENVIRONMENTAL IMPACT	
☐	☐	Is this property an important historic or natural site, or adjacent to such a site? If yes, explain:	

YES	NO	BUSINESS HOURS:	
☐	☐	Days of Operation:	weekdays; weekends
☐	☐	Hours of Operation:	Open from to
☐	☐	This is a year round operation.	
☐	☐	This is a seasonal operation. If so, what are the months of operation?	Open from to
☐	☐	Will there be more than one shift? If yes, please describe:	

Check All That Apply	THE FOLLOWING QUESTIONS MAY APPLY. (Answer Yes/No or comment Does Not Apply).	Explain or comment as needed for clarification

YES	NO	TRAFFIC	
		Estimate the number of vehicle trips entering and leaving the site on a daily basis.	entering; exiting
☐	☐	Estimate the number of vehicles entering and leaving the site during the busiest a.m. hour:	entering; exiting The busiest a.m. hour falls between a.m. and a.m..
☐	☐	Estimate the number of vehicles entering and leaving the site during the busiest p.m. hour:	entering; exiting The busiest p.m. hour falls between a.m. and p.m.
☐	☐	Will there be delivery truck service? If so indicate the following: size, number, type and frequency of delivery and service vehicles:	The size is feet wide and feet long; The number is ; the type is and the frequency is trips per day.

YES	NO	STATE AND LOCAL PERMITS	
☐	☐	Is a Maine Department of Environmental Protection (MDEP) Permit required? If so, list the permit.	
☐	☐	Is an Army Corps of Engineers approval/permit required? If so, list the permit.	
☐	☐	Are there any State or Federal approval required? If so, list the approval.	
☐	☐	Are there any State or Federal Licenses/ Permits required? If so list the license/permit.	
☐	☐	A Maine Construction General Permit (MCGP) is required where the area of disturbance is greater than one acre. Is an MCGP permit required?	
☐	☐	Is a variance from the Zoning Board of Appeals required? If yes, please describe:	
☐	☐	List all other municipal permits and licenses required:	

The undersigned hereby makes application to the Town of Gorham for approval of the proposed project and declares the foregoing to be true and accurate to the best of his/her knowledge.

SIGNATURE: APPLICANT OR APPLICANT'S AGENT

DATE

PRINT NAME

ADMINISTRATIVE REVIEW SUBMISSIONS CHECKLIST

Seven (7) copies of the application form and all required written materials, plus seven (7) sets of the proposed site plan, maps, and drawings containing the information listed below.

The written materials and plans must be organized and contained in a single report.

If approved, one original of the final site plan on durable, permanent transparency material must be submitted.

SUBMITTALS THAT THE TOWN PLANNER DEEMS SUFFICIENTLY LACKING IN CONTENT WILL NOT BE SCHEDULED FOR REVIEW.

GENERAL INFORMATION:

☐— Submission Requirements (Scale - 1" = 50' or less)

☐— Record owner's name, address and phone number and the applicant's name, address and phone number if different

☐— Location of all building setbacks, yards and buffers

☐— Names and addresses of all abutting property owners, including those in neighboring towns, if applicable.

☐— Sketch map showing general location of the site within the Town based upon a reduction of the Town tax maps

☐— Boundaries of all contiguous property under the control of the owner/ applicant, regardless of whether all or part is being developed at this time

☐— Assessing tax map and lot number of the parcel(s).

☐— Copy of the deed to the property, option to purchase the property or other documentation to demonstrate right, title or interest in the property on the part of the applicant

☐— Name, registration number and seal of the architect, engineer and/or similar professional who prepared the plan.

☐— General description of the proposed activity or use

EXISTING CONDITIONS

☐— Zoning classification(s) of property and the location of zoning district boundaries, if the property is located in two (2) or more zoning districts or abuts a different district

☐—Location and size of any existing sewer and water mains, culverts and drains, on-site sewage disposal systems, wells and power and telephone lines and poles on the property to be developed and of any that will serve the development from abutting streets or land

☐— Location, names and present widths of existing streets and right-of-ways within or adjacent to the proposed development.

☐— Location, dimensions and ground floor elevations of all existing buildings on site

☐— Location and dimensions of existing driveways, streets, parking and loading areas and walkways on site

☐— Location of intersecting roads or driveways within two hundred (200) feet of the site.

☐— Location of open drainage courses, floodplains, wetlands, stands of trees, and other important natural features, with a description of such features to be retained

☐— Direction of existing surface water drainage across the site

☐— Location, front view and dimensions of existing signs

☐— Location and dimensions of any existing easements and copies of existing covenants or deed restrictions

IT IS THE RESPONSIBILITY OF THE APPLICANT TO PRESENT A CLEAR UNDERSTANDING OF THE PROJECT.

PROPOSED DEVELOPMENT ACTIVITY

☐— Location of the nearest fire hydrant, dry hydrant or other water supply for fire protection and any existing fire protection systems

☐—Location and dimensions of all provisions for water supply and waste-water disposal and evidence of their adequacy for the proposed use, including test pit data if on-site sewage disposal is proposed

☐— Direction of proposed surface water drainage across the site.

☐— Provisions for handling solid wastes, including the location and proposed treatment of any on-site collection or storage facilities

☐— Location, dimensions and ground floor elevations of all proposed buildings or expansion on the site

☐— Location and dimensions of proposed driveways, parking and loading dock areas and walkways.

☐— Location, front view, materials and dimensions of proposed signs, together with the method for securing the sign

☐— Location and type of exterior lighting

☐— Proposed landscaping and buffering

☐— Construction schedule, including anticipated beginning and completion dates

☐— Location of all utilities, including fire protection systems.

☐— Statement of any hazardous materials that will be stored or used on the site

APPROVAL BLOCK

☐—Space must be provided on the site plan for the five (5) signatures of the Gorham Site Plan Review Committee and the date, together with the following words, "Approved: Town of Gorham Site Plan Review Committee

☐— Written request for waivers of any submission requirements must be made at the time of application

SUPPLEMENTAL INFORMATION

☐—Projects with potential for having significant adverse impact on traffic flow or safety and/or on the environment may be required to submit a traffic impact assessment and/or an environmental impact assessment

☐— A boundary survey of the parcel may be required if the property lines are not clearly and easily determined on the ground

Other

☐—Floodplain boundaries, plus base flood elevations.

☐—Delineation of Shoreland Zoning Overlay Districts

AGENT AUTHORIZATION

APPLICANT/ OWNER	**Name**				
PROPERTY DESCRIPTION	**Physical Address**			**Map**	
				Lot	
APPLICANT'S AGENT INFORMATION	**Name**				
	Phone		**Business Name & Mailing Address**		
	Fax				
	Email				

Said agent(s) may represent me/us before Gorham Town officers and the Gorham Planning Board to expedite and complete the approval of the proposed development for this parcel.

APPLICANT SIGNATURE DATE

PLEASE TYPE OR PRINT NAME HERE

CO APPLICANT SIGNATURE (If applicable) DATE

PLEASE TYPE OR PRINT NAME HERE

APPLICANT'S AGENT SIGNATURE DATE

PLEASE TYPE OR PRINT NAME HERE

PARKING STANDARDS

PARKING STALL DIMENSIONS
Single Row / one-wayaisles

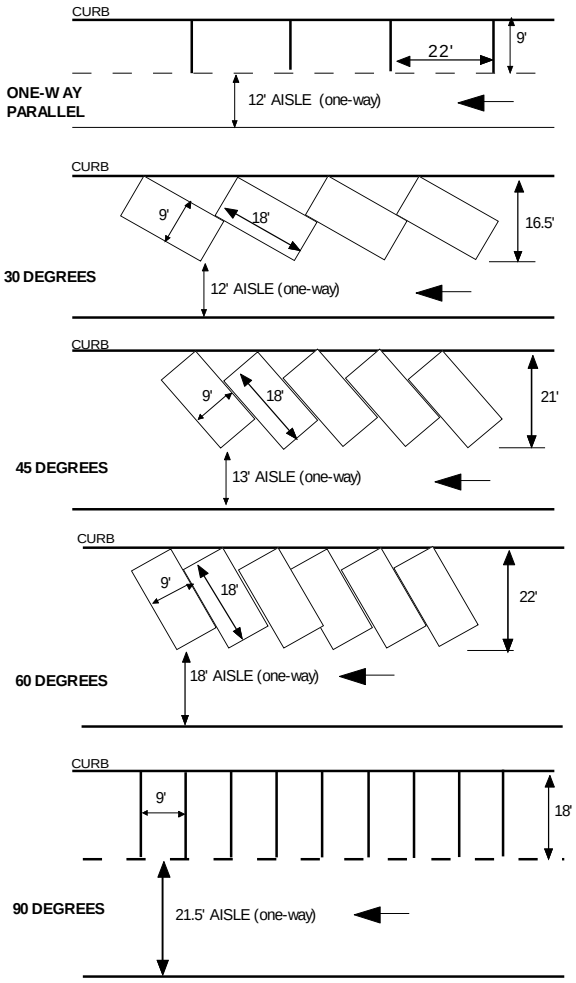

PARKING STALL DIMENSIONS
Two Rows of Parking / one-wayaisles

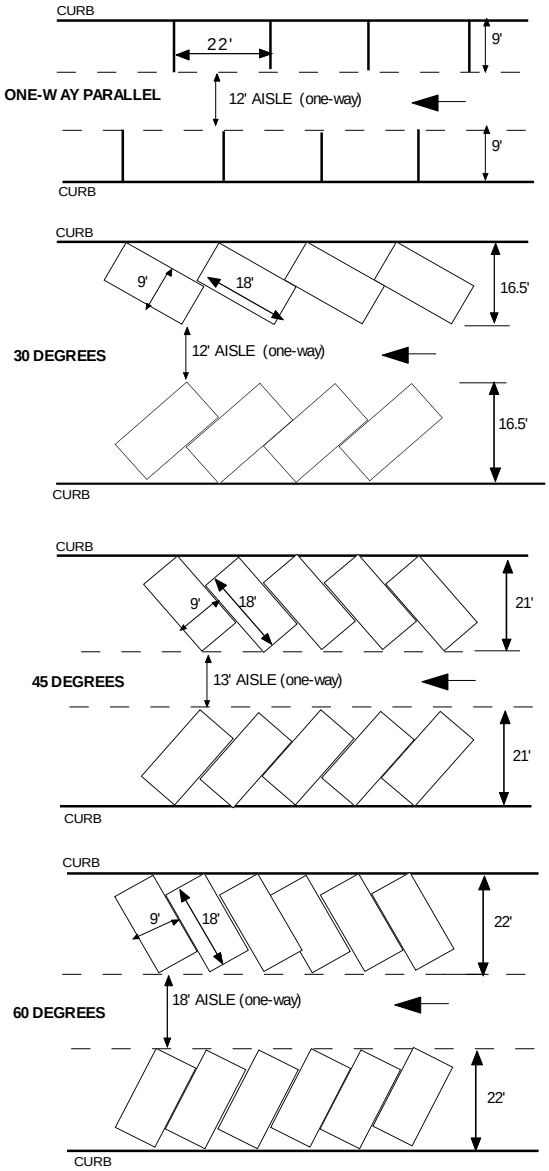
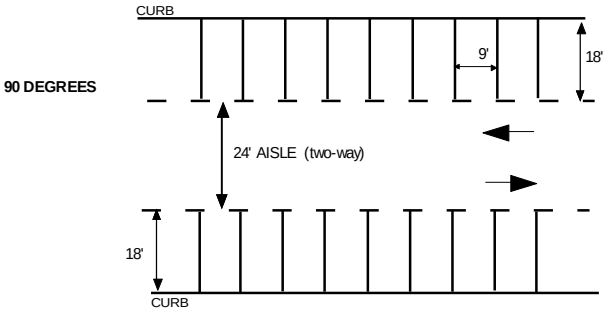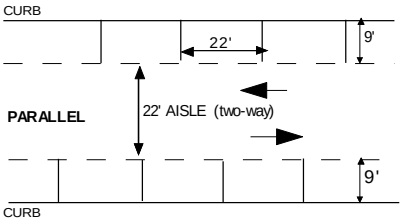
PARKING STALL DIMENSIONS
Two Rows of Parking / two-wayaisles